Operational Manual

MINIPHOTOMETER
MODEL 6+

Metertech Inc.

Version 2.01

Metertech

63-2, Cheng Gong Road, Sec. 1, Nangang, Taipei, Taiwan, R.O.C.
Tel.:+886-2-2783-2854 Fax:+886-2-2783-1764
www.metertech-inc.com info@metertech.com.tw

PRODUCT WARRANTY

Your Metertech Model 6+ Miniphotometer is guaranteed to be free of defects in workmanship and materials under normal use for a period of one year from the date of purchase by the consumer.

The liability of Metertech Inc. is limited to repair or replacement and in no event shall Metertech be liable for any collateral or consequential damages or loss.

Instruments subjected to misuse, abuse, neglect or unauthorized repair or modifications will be excluded from this warranty.

This guarantee specifically excludes expendables and consumables.

All warranty claims must be directed to the Metertech Inc. distributor responsible for the sale of the instrument.

Metertech Inc. • 63-2, ChengGong Rd., Sec. 1, NanGang, Taipei, Taiwan, ROC
E-Mail: info@metertech-inc.com • Web Site: www.metertech-inc.com
Tel: 886-2-2783-2854 • Fax: 886-2-2783-1764

Contents

SECTION 1 INSTALLATION ---------- 3

1-1 Unpacking ---------- 3

1-2 Standard Equipment ---------- 3

1-3 Whole Unit ---------- 3

1-4 Installation ---------- 4

SECTION 2 GENERAL SYSTEM INFORMATION ---------- 5

2-1 General Introduction ---------- 5

2-2 Specifications ---------- 5

SECTION 3 FUNCTION DESCRIPTION ---------- 7

3-1 Modes ---------- 7

3-2 Convertibilities ---------- 7

3-2-1Well-strip Holder ---------- 8

3-2-2Cuvette Holder ---------- 8

3-2-3Interference Filters ---------- 8

3-3 Control Button Instruction ---------- 9

3-4 RS-232 Interface ---------- 10

3-5 Centronic Interface ---------- 10

SECTION 4 OPERATION ---------- 11

4-1 Absorbance Mode ---------- 11

4-2 Concentration Mode(without standard) ---------- 12

4-3 Concentration Mode(with standard) ---------- 13

4-4 Cut Off Mode ---------- 14

4-5 Print Function ---------- 15

4-6 RS232 Function ---------- 15

4-7 ABS Calibration Function ---------- 16

4-8 Operation with well-strip ---------- 17

SECTION 5 MAINTENANCE ---------- 18

5-1 Notice ---------- 18

5-2 Error Messages ---------- 18

APPENDIX M6+mate INSTALLATION AND OPERATION ---------- 19

SECTION 1

INSTALLATION

1-1 Unpacking

The packing contains the items stated below. Unpack the carton and inspect carefully. If any part is damaged or missing, contact your dealer immediately.

Save the packing materials in case the unit may need to be repacked or returned for service.

1-2 Standard Equipment

Q'ty	DESCRIPTION	PART NO.
1	Model 6+ Miniphotometer	
1	Optical unit(two-in-one as a whole unit)	M006-001
1	450nm interference filter	M006-450
1	Well-strip holder	M006-006
1	Cuvette holder (round)	M006-003
1	Power adapter (110V) or	M006-009
1	Power adapter (220V)	M006-010
1	Operator's manual	M006-012

1-3 Whole Unit

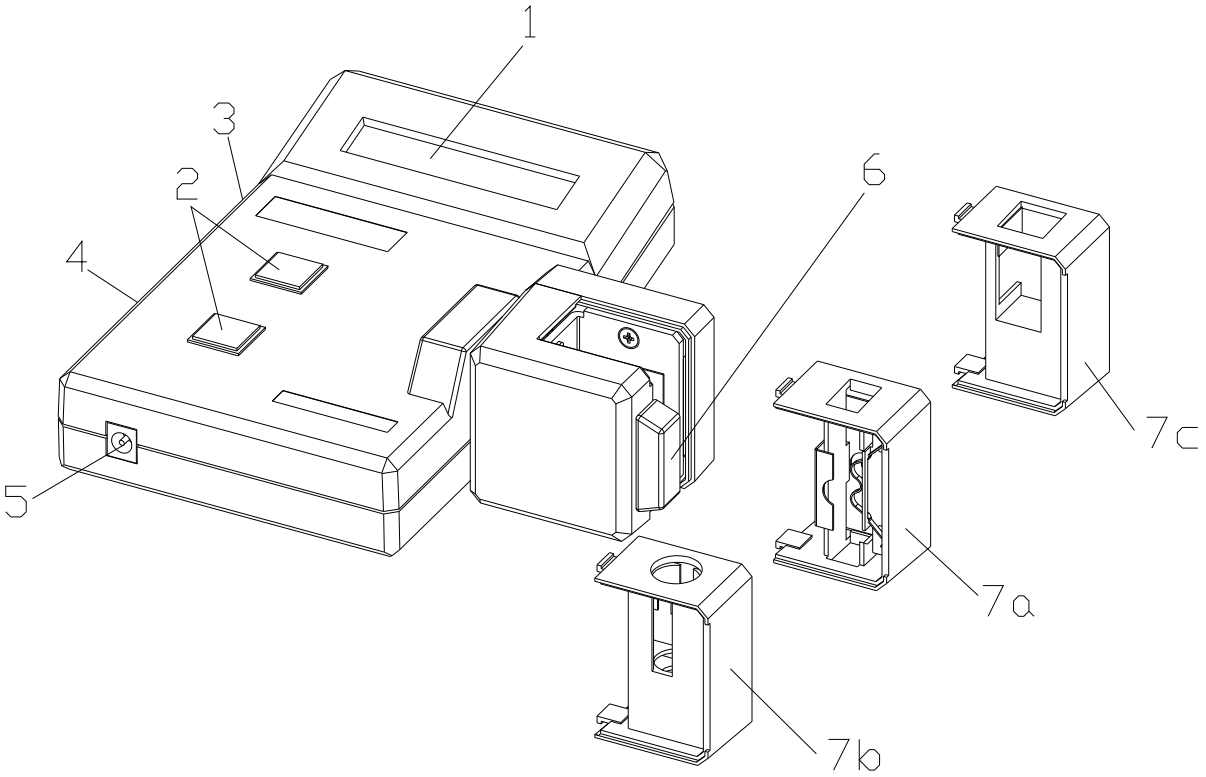

1. LCD Display
2. Touch Buttons
3. Centronic Receptacle
4. RS-232 Receptacle
5. Power Adapter/
   Battery Receptacle
6. Filter
7-a. Well-strip Holder
7-b. Round Cuvette Holder
7-c. Square Cell Holder
8. Power Adapter

1-4 Installation

1. Check if the supplied power adapter is at right voltage to be used.

2. Insert the phone plug of the power adapter or optional battery bag into the receptacle located at the left of the front side of the unit.

3. Connect with your PC or printer if desired.

4. LCD of the unit will display the greeting message "Metertech,Miniphotometer" and then "SYSTEM MENU, 1:ABS MODE" ..... Refer details of operation in **Section 4**.

SECTION 2

GENERAL SYSTEM INFORMATION

2-1 General Introduction

The Convertible Well-strip/Cuvette Reader Model 6+ is a portable miniphotometer designed to do ELISA testings in either 1x8/1x12 microwell strips or round/square cuvettes by interference filter for wavelength of 400-700nm.

Model 6+ is a user-friendly ELISA reader. All operations are carried out with only two touch buttons by following instruction on the LCD display, and results can be obtained within two seconds.

Model 6+ undertakes testings with an extreme economic Reagent consumption, in microwell at 0.3ml and in cuvette at 0.5ml.

The installed RS-232 and centronic interfaces allow Connections to computer and optional printer.

Model 6+ also can be connected with any 12V battery bag or field operations.

In short, Model 6+ is a very ideal instrument for doctor's use either in the office or on the field operation.

2-2 Specifications

Wavelength Range	400-700nm
Filters	Narrow band interference filters Bandwidth : 10nm +/-2nm Standard : 450nm
Photodetector	Solid-state silicon photodiode
Display	LCD 16x2 characters
External Outputs	RS-232 interface Parallel printer interface
Light Source	Focalized tungsten lamp 6V/2W
Absorbance Range	0.000 – 2.500 O.D.
Linearity	0.000 – 1.500 O.D. +/- 2.0%
Concentration Range	00000.00 – 99999.99
Reproducibility	< +/- 0.005 O.D.(under 2.000 O.D.)
Resolution	0.001 O.D.(under 2.000 O.D.)
Data Storage	125 Sets
Power(Adapter)	Input AC 120V/240V

	Output DC 12V/700mA
Sample Compartment	Strip : 9x13mm standard well-strip Cuvette: Round 12mm in diameter
Dimension	Whole unit: 150mm(W) 170mm(D) 50mm(H) Optical unit: 50mm(W) 50mm(D) 50mm(H)
Weight	850 grams (with power adapter)
Options	1. 10mm square cuvette holder 2. Centronic cable 3. RS-232 cable 4. Thermal printer(40 column)

SECTION 3

FUNCTION DESCRIPTION

Model 6+ uses a low voltage Tungsten lamp for sample illumination. Lamp life is conserved by being only turned on for the brief measurement period after a button is pressed to blank or read a sample.

Light from the lamp is collected by the condenser lens set and focalized to a narrow beam in the sample well/cuvette below. The analyzing beam then passes through interference filter which passes only the wavelength of interest, on to the photodiode.

The photo-signal is amplified by a high gain amplifier and converted to a digital signal by an analog to digital converter. This digital signal is processed by the microcomputer and the computed units are presented by the 16x2 character alpha-numeric display.

3-1 Modes

Model 6+ can read ABSORBANCE and calculate CONCENTRATION.
Three modes are selectable:

1. Absorbance mode
2. Concentration mode (with no standard)
3. Concentration mode (with standard)
4. Cut Off mode

3-2 Convertibilities

Model 6+ is a convertible photometer in reading both well-strip and cuvette at 400-700nm wavelength.

3-2-1 Well-strip Holder

The supplied standard well-strip holder can fit 9x13mm well-strip (1x8 or 1x12). Turn the optical unit in position as **fig 3-1** (Note: figures of filter in right reading way) to install/remove the holder.

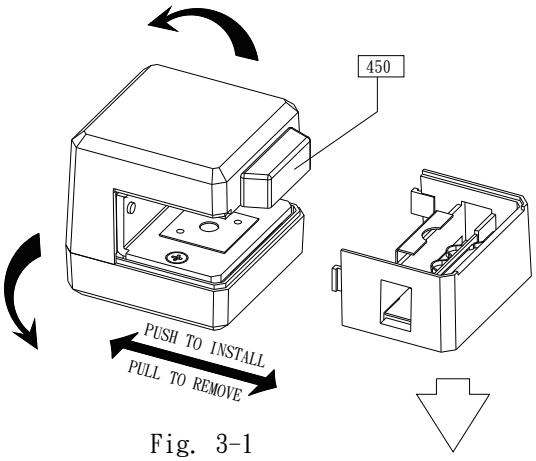

Fig. 3-1

3-2-2 Cuvette Holder

Remove well-strip holder, and turn counterclockwise for 90 degrees to install cuvette holder as **Fig 3-2**. Return to well-strip reading in opposite direction.

One standard round cuvette holder (12mm in diameter) is supplied with the unit. Optional square cuvette holder(10x10mm) can be purchased separately.

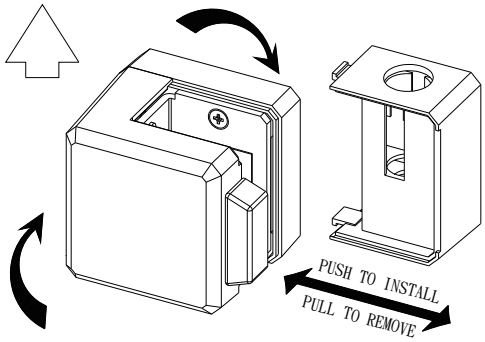

Fig. 3-2

3-2-3 Interference filters

Refer easy access of exchange of filter as **Fig 3-3**.

One standard 450nm filter is supplied with the unit. Options of 405/490/550/600/650nm and other filters can be purchased separately.

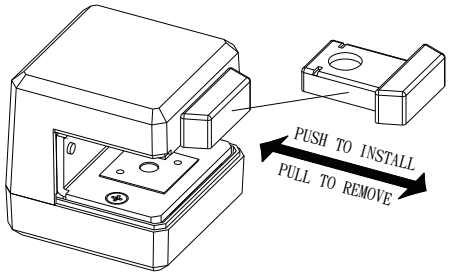

Fig. 3-3

3-3 Control Button Instruction

Model 6+ is fully operated only with two touch buttons.

READ/ENTER button controls

- to enter the selected mode
- to read Blank, Standard, and Sample
- to move cursor when keying in Factor and Standard Concentration values

SEL/ESC button controls

- to select different mode
- to return to SYSTEM MENU, previous action
- to key in Sample name, Factor and Standard
- Concentration value

** 1. Standard Concentration and Factor values are keyed in order form left to right; Standard value is limited in 00000.0-99999.9, Factor value in 0000.00-9999.99.

2. SEL/ESC button keys in figures 0-9 in rotation.

3. READ/ENTER button can only move cursor rightwards.

4. When a wrong figure is keyed in, you need to press SEL/ESC button to exit the existing mode and return to “SYSTEM MENU”.

3-4 RS-232 Interface

This is interface for connection to your PC. The optional RS-232 cable should be purchased separately. The access is as follows:

9-pin female cable

```
                    (1)
1----------         (2) RXD
2----------         (3) TXD
                    (4)
   3----------      (5) SG
                     .
                     .
                     .
                    (9)
```

3-5 Centronic Interface

This interface controls connection with an optional portable printer or your printer. The optional 20pin/36pin centronic cable should be purchased separately.

SECTION 4

OPERATION

Power is supplies to the unit from an adaptor or from any 12VDC battery bag.

After power is turned on, LCD displays the greeting message “Meteretch, Miniphotometer” and followed by “SYSTEM MENU, 1:ABS MODE”. Then you may proceed your required mode in either well-strip or cuvette as procedures stated below.

4-1 Absorbance Mode

01 Press READ/ENTER button.
02 LCD displays “ABS MODE, READ BLANK”.
03 Insert the blank well or place the blank cuvette into the read position.
04 Press READ/ENTER button.
05 The unit reads and zeroes the blank well/cuvette, and LCD displays “00 0.000ABS, READ SAMPLE”.
06 Push the first sample well or place the first sample cuvette into the read position.
07 Press READ/ENTER button
08 The Absorbance of the first sample is read and LCD displays “01 X.XXXABS, SET NAME MX”.
09 Press SEL/ESC button to select the sample name from M0 to M9 and MX. The data with name from M0 to M9 will be saved in memory; a reading with name MX will not be saved in memory. The newest measured data is put on the top of memory space.
10 Press READ/ENTER button.
11 LCD displays “01 X.XXXABS MX, READ SAMPLE”.
12 Push the next sample well or place the next sample cuvette to continue as steps 07-11 and results of samples will be led by 02, 03 ..... 99,00,01,02 ....., unless to quit the existing readings of samples to .....

12-1 Re-zero a new blank by pressing SEL/ESC button to return to step 02.
12-2 Or exit the Absorbance mode for another new mode by pressing SEL/ESC button twice. This will return to the display “SYSTEM MENU, 1:ABS MODE”.

Note: 1. If filter is not properly installed, LCD will display “READ ERROR”. Check and ensure the filter is in right position, and press READ/ENTER button to repeat the last action.

2. <u>If you want to erase data stored in memory</u>, please return to System Menu, then press SEL/ESC and READ/ENTER buttons. LCD displays “ENG MENU, 1:ADC READING”. Press SEL/ESC button, LCD shows “2:CLEAR MEMORY”. Press READ/ENTER button, all the stored data will be deleted.

4-2 Concentration Mode (with no standard)

01 Press SEL/ESC button from “SYSTEM MENU, 1:ABS MODE”.
02 LCD displays “SYSTEM MENU, 2:A-CONC MODE(1)”.
03 Press READ/ENTER button. LCD displays “KEY IN FACTOR, FACTOR=0000.0”.
04 Key in Factor value (0000.0-9999.9) as instructed in **Section 3-3-****.
05 LCD displays “A-CONC MODE(1), READ BLANK”.
06 Insert the blank well or place the blank cuvette into the read position.
07 Press READ/ENTER button.
08 The unit reads and zeroes the blank well/cuvette, and displays “00 00000.00C, READ SAMPLE”.
09 Push the first sample well or place the first sample cuvette into the read position.
10 Press READ/ENTER button.
11 The concentration of first sample is calculated, and displays “01 XXXXX.XXC, SET NAME MX”.
12 Press SEL/ESC button to select the sample name from M0 to M9 and MX.
13 Press READ/ENTER button.
14 LCD displays “01 XXXXX.XXC MX, READ SAMPLE”.
15 Push the next sample well or place the next sample cuvette to continue as steps 10-14 and results of samples will be led by 02, 03 ..... 99, 00, 01, 02, ..., unless to quit the existing readings of samples to .....

15-1 Re-zero a new blank by pressing SEL/ESC button to return to step 05.
15-2 Or exit the Concentration (with no standard) mode for another new mode by press DEL/ESC button twice. This will return to the display “SYSTEM MENU, 1:ABS MODE”.

Note: **If “READ ERROR” is displayed on LCD, refer Note in Section 4-1 for a solution.**

4-3 Concentration Mode (with standard)

01 Press SEL/ESC button twice from display “SYSTEM MENU, 1:ABS MODE”.
02 LCD displays “SYSTEM MENU, 3:A-CONC MODE(2)”.
03 Press READ/ENTER button, LCD displays “KEY IN CONCEN, CONCEN=00000.00C”.
04 Key in Concentration value(00000.00-99999.99) of standard as instructed in **Section 3-3-****.
05 LCD displays “A-CONC MODE(2), READ BLANK”.
06 Insert the blank well or place the blank cuvette into the read position.
07 Press READ/ENTER button.
08 The unit reads and zeroes the blank well/cuvette, and display “00 0.000ABS, READ STANDARD”.
09 Push the standard well or place the standard cuvette into the read position.
10 Press READ/ENTER button.
11 The units reads the standard and calculates its Factor value, and displays “FACTOR=XXXX.X, READ BLANK”.
12 User can test sample blank by following step 12-15, or press SEL/ESC button and jump to step 16 to measure sample directly.
13 Insert the blank well or place the blank cuvette into the read position.
14 Press READ/ENTER button.
15 The unit reads and zeroes the blank well/cuvette, and displays “00 00000.00C, READ SAMPLE”.
16 Push the first sample well or place the first sample cuvette into the read position.
17 Press READ/ENTER button.
18 The Concentration of first sample is calculated, and displayed as “01 XXXXX.XXC, SET NAME MX”
19 Press SEL/ESC button to select the sample name from M0 to M9 and MX.
20 Press READ/ENTER button.
21 LCD displays “01 XXXXX.XXC MX, READ SAMPLE”.
22 Push the next sample well or place the next sample cuvette to continue as steps 16-20 and results of samples will be led by 02, 03 ..... 99, 00, 01, 02, ..., unless to quit the existing readings of samples to .....

21-1 Re-zero a new blank by pressing SEL/ESC button to return to step 13.
21-2 Or exit the Concentration (with standard) mode for another new mode by press DEL/ESC button twice. This will return to the display “SYSTEM MENU, 1:ABS MODE”.

Note: 1. If “READ ERROR” is displayed on LCD, refer Note in Section 4-1 for a solution.
2. If the calculation result of standard Factor exceeds 9999.99, LCD will display “FACTOR ERROR”. Press READ/ENTER button will return to step 03, user can key in correct standard value, and do proper standard measurement again.

4-4 Cut Off Mode

01 Press SEL/ESC button three times from display “SYSTEM MENU,1:ABS MODE”.
02 LCD displays “SYSTEM MENU,4:CUT OFF MODE”.
03 Press READ/ENTER button, LCD displays “KEY IN COEFF A, A=0.000”.
04 Key in positive control coefficient A(0.000-9.999) of standard as instructed in **Section 3-3-****.Please read note 1 below for the formula of cut off value(COV).
05 Key in negative control coefficient B, cut off control coefficient C, D and offset E.
06 If the keyed in coefficients makes the resultant value of COV zero, “**KEY IN ERROR**” will be displayed. Press SEL/ESC button and return to step 03 to correct coefficients.
07 After finishing above step, LCD displays “CUT OFF MODE, READ BLANK”. Press SEL/ESC button and return to step 3 for coefficient checking, or follow the next step.
08 Insert the blank well or place the blank cuvette into the read position.
09 Press READ/ENTER button.
10 The unit reads and zeroes the blank well/cuvette, and LCD displays “00 0.000ABS, READ PC”.
11 Push the standard well or place the standard cuvette (positive control solution) into the read position.
12 Press READ/ENTER button. LCD displays “PC= X.XXXABS, READ NC”.
13 Push the standard well or place the standard cuvette (negative control solution) into the read position.
14 Press READ/ENTER button. LCD displays “NC= X.XXXABS, READ COC”.
15 Push the standard well or place the standard cuvette (cut off control solution) into the read position.
16 Press READ/ENTER button. LCD displays “COC= X.XXXABS, CALCULATE COV”.
17 Press READ/ENTER button. LCD displays “COV= X.XXXABS, SET NAME MX”.
18 Press SEL/ESC button to select COV name from M0 to M9, and MX.
19 Press READ/ENTER button. LCD displays “COV= X.XXXABS MX, READ BLANK”

20 Press SEL/ESC button and directly jump to step 21, or insert the blank well or place the blank cuvette into the read position then press READ/ENTER button.
21 LCD displays “00 0.000ABS, READ SAMPLE”.
22 Push the sample well or place the sample cuvette into the read position, then press READ/ENTER button.
23 LCD displays “ 01 ++++++++, SET NAME MX”. Please refer to note 2 below for sign(++++++++) explanation.
24 Press SEL/ESC button to select sample name from M0 to M9, and MX.
25 LCD displays “01 ++++++++ MX, READ SAMPLE”.
26 Repeat step 22 to step 25 for the rest of sample measurement, or press SEL/ESC button to go back to System Menu.

Note: 1. COV = (A x PC + B x NC + C x COC) x D + E
Where COV is Cut Off Value.
2. If the sample absorbance is larger than calculated COV, LCD shows “++++++++”. If smaller than COV, “--------” will be displayed. If |COV – sample reading| < 0.020ABS, LCD shows “******”.**
3. If obtained COV is larger than 2.500ABS, “COV ERROR” will be displayed. Press SEL/ESC button and return to step 03 to start over, or follow step 08 to read standard solutions again.

4-5 Print Function

01 Press SEL/ESC button four times from display “SYSTEM MENU,1:ABS MODE”.
02 LCD displays “SYSTEM MENU,5:PRINT”.

03 Press READ/ENTER button, LCD will sequentially display 125 sets of stored data with the form “XXX X.XXXABS MX”.

04 Press READ/ENTER button, LCD will stay at one reading. Press READ/ENTER button again, LCD will continue update new reading to the final reading. Press SEL/ESC button, the display will go back to “SYSTEM MENU, 1:ABS MODE”.

05 If the printer is already connected to the machine, all the data will be printed out.

Note: If printer is connected to the machine while operating at above any mode, the displayed blank data, sample data and standard data will also be printed.

4-6 RS-232 Function

01 Press SEL/ESC button five times from display “SYSTEM MENU,1:ABS MODE”.

02 LCD displays “SYSTEM MENU,6:RS232”

03 Connect PC COM port to the machine serial port through RS-232 cable.

04 Press READ/ENTER button, LCD displays “RS232, M6-----PC”. The machine is waiting for, accepting and executing PC command such that the stored data is transmitted to PC. After finishing this work, press SEL/ESC button to return to main menu.

4-7 ABS Calibration Function

01 Press SEL/ESC button six times from display “SYSTEM MENU, 1:ABS MODE”.
02 LCD display “SYSTEM MENU, 7:CALIBRATION”.
03 Press READ/ENTER button, LCD displays “ABS CALIBRATION, COEFF=1.000”.
04 Press READ/ENTER button, LCD displays “ABS CALIBRATION, 1:KEY IN COEFF”. User can press SEL/ESC button to select “1:KEY IN COEFF” by following step 05 , or “2:READ STANDARD” following step 06.
05 Press READ/ENTER button, LCD displays “KEY IN COEFF, COEFF= 1.000”. Key in coefficient value as instructed in **Section 3-3-****. Press SEL/ESC button to go back to SYSTEM MENU.
06 Press READ/ENTER button, LCD displays “KEY IN STANDARD, ABS=0.000”. Key in standard ABS value as instructed in **Section 3-3-****.
07 Press READ/ENTER button, LCD displays “CALIBRATION, READ BLANK”. Insert the blank well or place the blank cuvette into the read position.
08 Press READ/ENTER button, and LCD displays “00 0.000ABS, READ STANDARD”.
09 Push the standard well or place the standard cuvette into the read position.
10 Press READ/ENTER button, and LCD displays “ABS CALIBRATION, COEFF=X.XXX”. Press SEL/ESC button and go back to SYSTEM MENU.

Note: The default coefficient value is 1.000, and any change through above steps will be saved in memory. <u>The coefficient is used as a multiplier for all ABS reading of four measurement modes</u>. Measurement errors can be reduced by this calibration procedure.

4-8 Operation with Well-Strip

(A) Position of Strip

The reading position is located at the center of path that strip passes. There are three wells from reading position to either entry or exit of the path.

Take 8-well strip for instance, the first(last) well is at reading position when five wells expose on entry (exit) end.(**Fig. 4-1**)

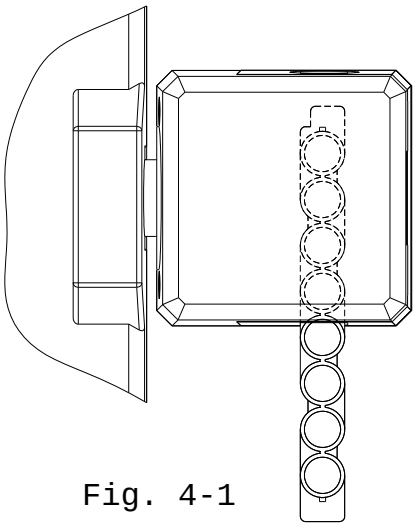

Fig. 4-1

(B) Insertion of Strip

Horizontally insert and slightly push the strip until the first well is held for reading. Declining insertion either upwards on downwards is incorrect.(**Fig. 4-2**)

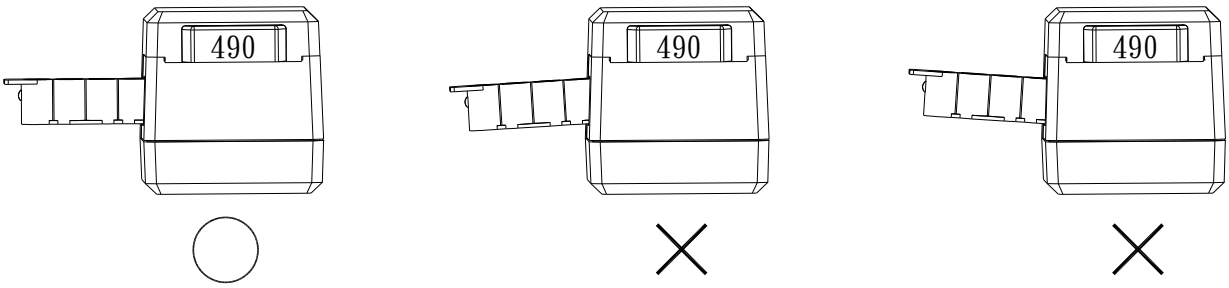

Fig. 4-2

SECTION 5

MAINTENANCE

5-1 Notice

Besides exchange of well-strip/cuvette and filters as mentioned earlier, Model 6^{+} has no user replaceable or adjustable components inside the cover. Do not remove the cover unless specifically authorized by your dealer or the manufacturer.

Return it for servicing if your Model 6^{+} can not be operated properly as instructed in this Manual.

5-2 Error Messages

You may refer solution for the following error messages in **Section 4 – Notes.**

1. “READ ERROR”
2. “FACTOR ERROR”
3. “KEY IN ERROR”
4. “COV ERROR”

APPENDIX

M6+mate Installation and Operation

A1. PC system requirement

-CPU model need be newer than Pentium-100, equipped with CD driver.

- Microsoft Windows 95 + IE5.0 or Microsoft Windows 98.

-Video card capable supporting 800X600 pixels and 16 bit(Hi color) color resolution at least.

-Mouse, keypad, one serial communication port(COM 2) for RS232 and one 9 pin connector.

A2. About the CD-ROM

-An executable program 'M6plus' written on this CD, is the main program for downloading the stored data on the M6+ machine to the PC.

A3. M6+mate installation

-Select the installation program 'Setup.exe' under the 'M6plus' directory, and make execution.

-Please follow instructions to complete the installation work. A program 'M6plus.exe' will be generated under C:\program files\M6plus directory.

A4. Online operation

-Make sure 9-pin connector is plugged on the RS-232 output of M6+ and COM2 of PC.

-Power on PC and M6+, press SEL/ESC button five times on M6+. LCD shows 'SYSTEM MENU, 6:RS232'. Then press READ/ENTER button, LCD shows 'RS232, M6-----PC'.

-Go to Program Files of Windows 95 or 98, find 'Model6 plus' file under 'Metertech' and click it. The M6plus is executed and a new window comes up.

-Click 'Setting' on the menu bar and click 'Comport port' under it, and a dialog box 'COM Port Setting' will show up. The default setting is COM2 and user can select whichever is suitable for real circumstances. After selecting the proper port, press 'Port Open' button to proceed.

-Click 'Manipulate' on the menu bar, then click 'Get Data' under it. The data

stored on the M6+ machine will be transmitted and displayed on the screen. All the data are decreasingly numbered with max number 125 at the start. The newest measured data is located at the top of data column.

-Click ‘File’ on the menu bar, you will find two choices ‘Data Save’ and ‘Data Print’. Click ‘Data Print’, all the data shown on the screen will be printed out. Click ‘Data Save’, you can create a file to save the current data in different location for further uses(for example using Excel tool to do data processing).